Quantum

SPARE PART LISTS

ELECRO
ENGINEERING

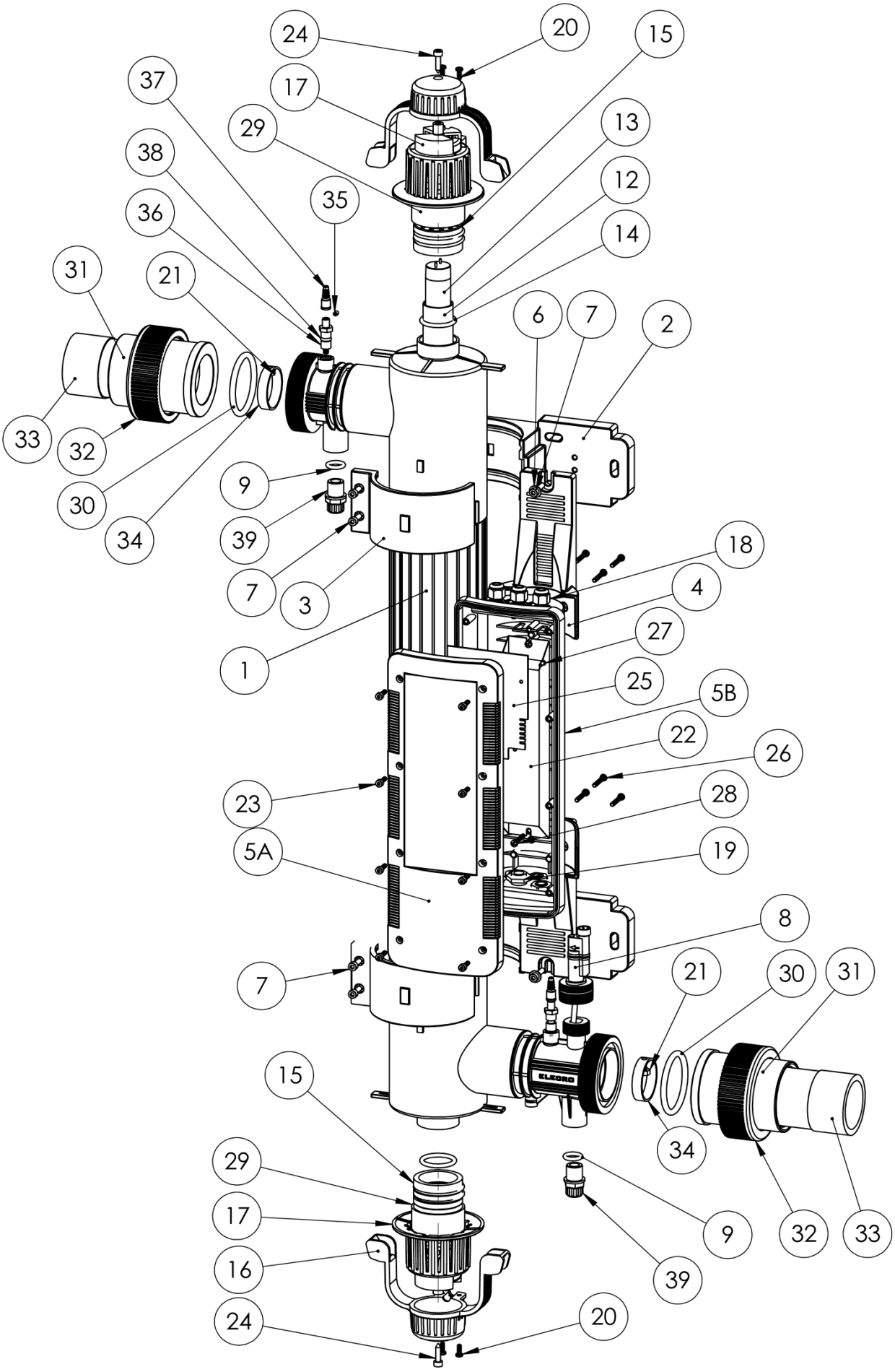
24
20
15
37
17
29
13
38
12
35
36
14
31
21
6
7
2
33
32
30
34
9
39
7
3
1
18
4
27
25
5B
22
26
23
28
5A
19
8
7
21
30
31
15
34
29
9
17
32
33
16
39
24
20

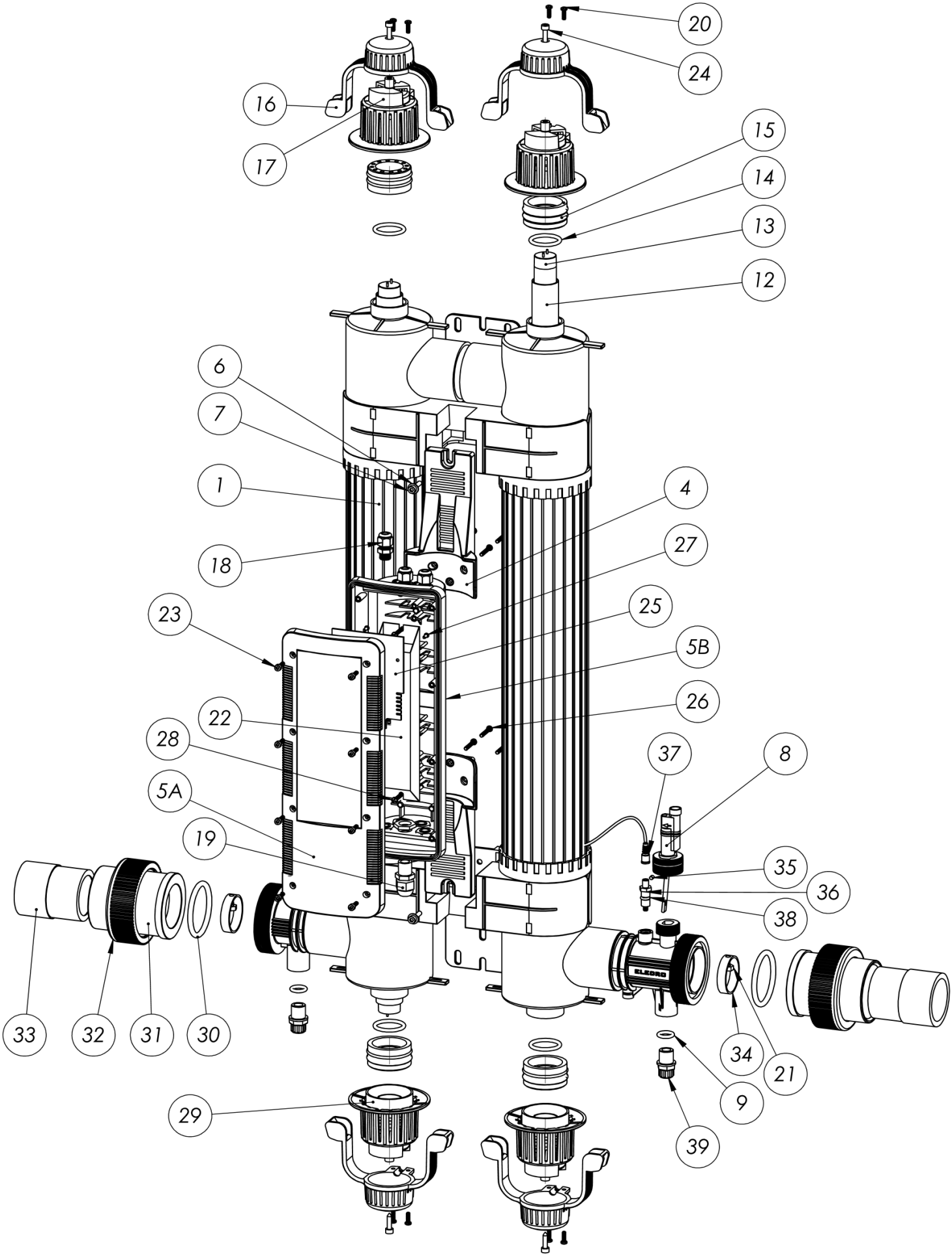
20
24
16
17
15
14
13
12
6
7
1
18
4
27
25
23
5B
26
22
28
37
8
5A
19
35
36
38
33
32
31
30
34
21
9
29
39

Item No.:	Description:	Pcs/Unit Q-65	Pcs/Unit Q-130	Elecro Part Number for Q-65	Elecro Part Number for Q-130	GBP RRP (£)		EUR RRP (€)		USD RRP ($)	
						Q-65	Q-130	Q-65	Q-130	Q-65	Q-130
1	Quantum Replacement Body Assembly (Complete with Titanium reflector and T-Piece)	1	1	SP-UV-B-Q-65	SP-UV-B-Q-130	347.46	496.43	399.58	570.90	486.45	695.01
2	Rear Mounting Bracket	2	-	Z-IM-UV-ST-RB	-	12.14	-	13.96	-	16.99	-
3	Front Mounting Bracket	2	-	Z-IM-UV-ST-FB	-	5.51	-	6.33	-	7.71	-
4	Enclosure Bracket	2	2	Z-IM-UV-ENC-B		11.02		12.67		15.42	
5A	Analogue Quantum Front Cover	1	1	Z-IM-UV-FC		12.14		13.96		16.99	
5B	Rear Enclosure	1	1	Z-IM-UV-ENC-N		18.77		21.58		26.28	
6	M5 Flat Form C Washer A2	2	2	Z-FIX-M5FCW		5.81		6.69		8.14	
7	POD Fixing Screw	2	2	Z-FIX-M4.8X19STS-SC		5.81		6.69		8.14	
8	Flow Switch	1	1	SP-107-UV-A	SP-107-UV-B	42.74		49.15		59.83	
9	Blanking Cap O-Ring Seal	2	2	Z-ORS-UV-T-PIECE		1.38		1.58		1.93	
12	Quartz Sleeve	1	2	SP-UV-QS		43.30		49.79		60.62	
13	UV Lamp	1	2	SP-UV-LAMP-EL		52.68		60.59		73.76	
14	Quartz Sleeve O-Ring Seal	2	4	SP-UV-ORS		1.33		1.52		1.86	
15	Quartz Sleeve Locking Nut	2	4	SP-UV-LNUT		7.91		9.09		11.07	
16	UV Lamp Holder Clip	2	4	Z-IM-UV-LH-CLIP		6.07		6.98		8.50	
17	UV Lamp Holder Hard Cap	2	4	Z-IM-UV-LH-CAP		8.26		9.50		11.57	
18	PG7 Entry Gland	3	3	Z-CON-CEG-PG7BK		7.70		8.86		10.78	
19	PG7 Entry Gland	4	4	Z-CON-CEG-PG7BK		7.70		8.86		10.78	
20	Lamp Lead Clamp Pozi Pan Screw	4	8	Z-FIX-M4X12		1.63		1.88		2.28	
21	Current Collector Hex Nut	2	2	Z-FIX-M5HEX		5.81		6.69		8.14	
22	Electronic ballast	1	1	SP-UV-BB-55	SP-UV-BB-110	121.33	165.50	139.53	190.32	169.86	231.69
23	Enclosure Fixing Screw	6	6	Z-FIX-M4X16-SC-ST		1.63		1.88		2.28	
24	Lamp Holder Clip Screw	2	4	Z-FIX-M4.8X19STS-SC		5.81		6.69		8.14	
25	Quantum Maintenance Timer PCB	1	1	SP-PCB-UV		104.81		120.53		146.73	
26	Bracket Screw	6	6	Z-FIX-M4X12		1.63		1.88		2.28	
27	PCB Fixing Screw	5	5	Z-FIX-M3X8-BLK		1.63		1.88		2.28	
28	Ballast Fixig Screw	2	2	Z-FIX-M4X12		1.63		1.88		2.28	
29	Lamp Lead Connection	2	4	SP-UV-LLL-S		19.33		22.23		27.06	
30	Large Union O-Ring Seal	2	2	SP-122-ORS		9.38		10.79		13.14	
31+ 32	Union Socket 2"/ 63mm Union Nut	2	2	SP-122		14.89		17.13		20.85	
33	Union Reducer 1½"/ 50mm	2	2	SP-UV-R		4.95		5.69		6.93	
34	10mm / 44.5mm OD Stainless Steel Ring	2	2	Z-TUB-SS44.5X10		9.38		10.79		13.14	
35	Current Collector Grub Screw	2	2	Z-FIX-M4X4GS		1.63		1.88		2.28	
36	Current Collector Pin (316 S/S)	2	2	Z-UV-CC-PIN		16.01		18.42		22.42	
37	UV Current Collector Rubber Boot	2	2	Z-UV-CC-RB		4.95		5.69		6.93	
38	UV Current Collector 'O' Ring	2	2	Z-ORS-UV-CC		2.75		3.17		3.86	
39	UV Blanking Plug	2	2	Z-IM-UV-BP		3.88		4.46		5.43	

Quantum PRO

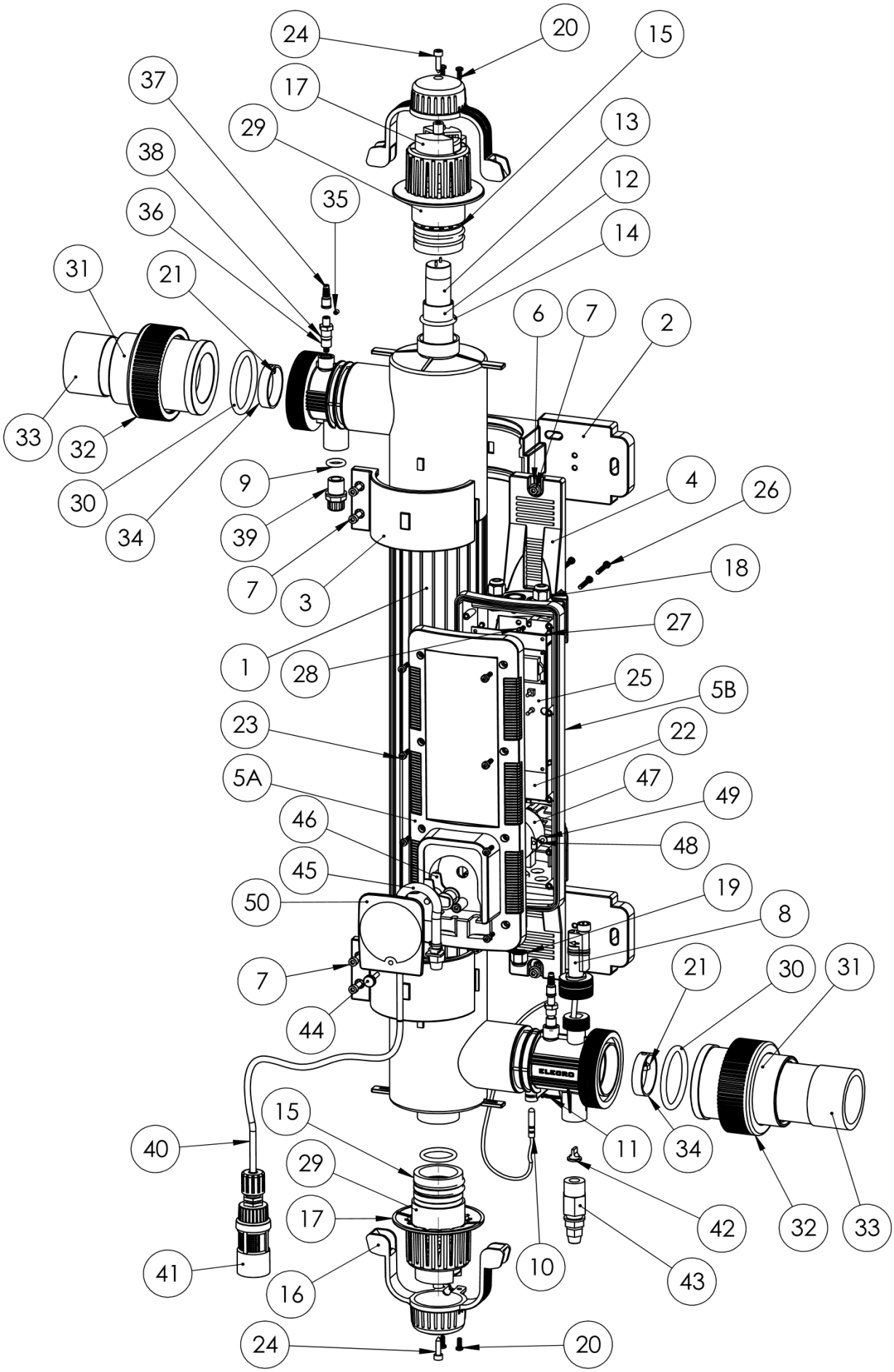

24
20
15
37
17
29
13
38
12
35
36
14
31
21
6
7
2
33
32
30
34
9
4
26
39
18
7
3
27
1
28
25
5B
23
22
5A
47
49
46
48
45
19
50
8
7
21
30
31
44
ELEGRO
15
11
34
40
29
42
32
33
17
10
41
43
16
24
20

Quantum PRO

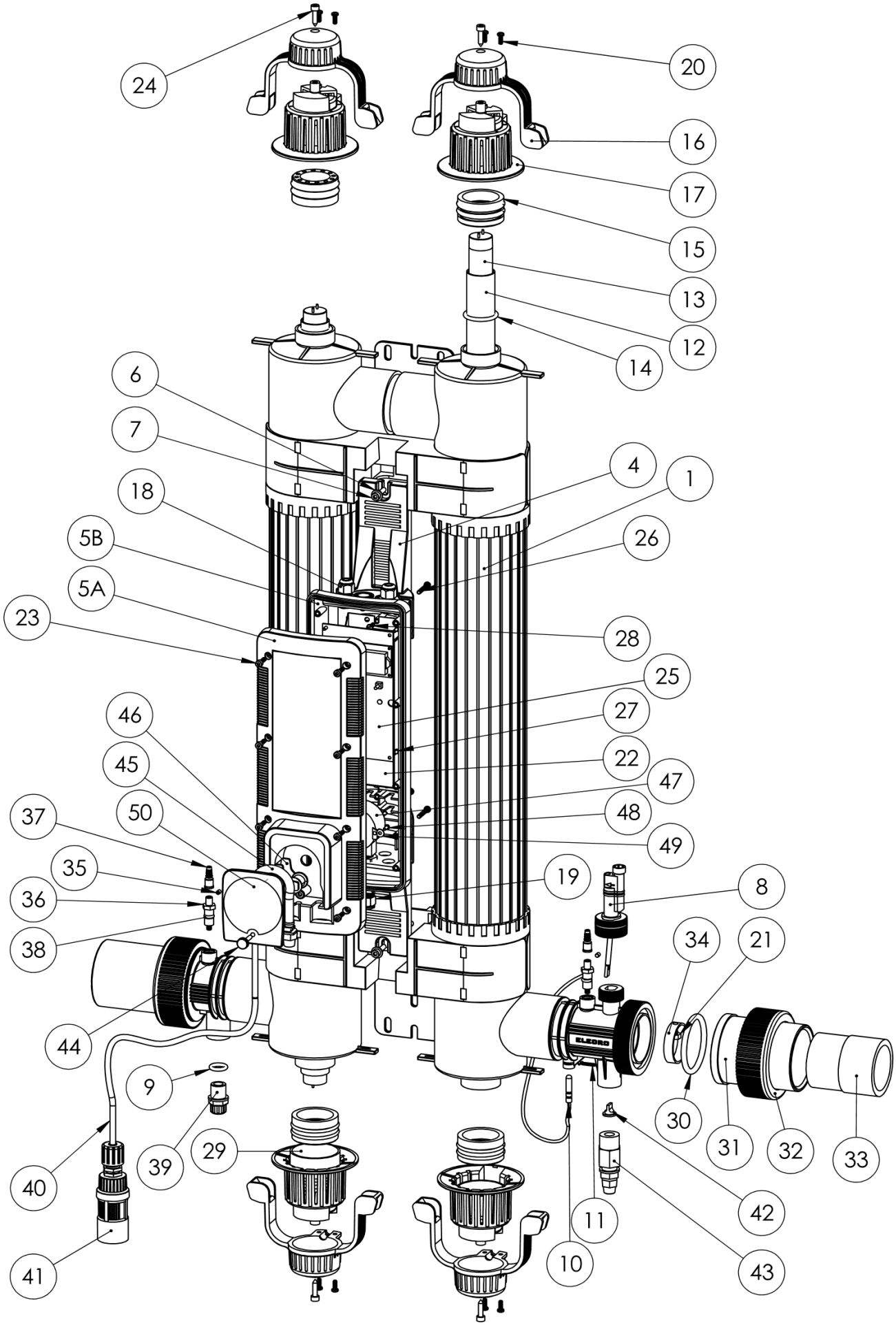
24
20
16
17
15
13
12
14
6
7
18
5B
5A
23
4
1
26
28
25
27
22
47
48
49
46
45
50
37
35
36
38
44
19
8
34
21
30
31
32
33
9
39
29
40
41
11
10
42
43

Item No.:	Description:	Pcs/Unit QP-65	Pcs/Unit QP-130	Elecro Part Number for QP-65	Elecro Part Number for QP-130	GBP RRP (£)		EUR RRP (€)		USD RRP ($)	
						QP-65	QP-130	QP-65	QP-130	QP-65	QP-130
1	Quantum Replacement Body Assembly (Complete with Titanium reflector and T-Piece)	1	1	SP-UV-B-Q-65	SP-UV-B-Q-130	347.46	496.43	399.58	570.90	486.45	695.01
2	Rear Mounting Bracket	2	-	Z-IM-UV-ST-RB	-	12.14	-	13.96	-	16.99	-
3	Front Mounting Bracket	2	-	Z-IM-UV-ST-FB	-	5.51	-	5.60	-	7.71	-
4	Enclosure Bracket	2	2	Z-IM-UV-ENC-B		11.02		12.67		15.42	
5A	Quantum Front Cover with Pump	1	1	Z-IM-UV-FC		12.97		14.92		18.16	
5B	Rear Enclosure	1	1	Z-IM-UV-ENC-N		18.77		21.58		26.28	
6	M5 Flat Form C Washer A2	2	2	Z-FIX-M5FCW		6.21		7.14		8.70	
7	POD Fixing Screw	2	2	Z-FIX-M4.8X19STS-SC		5.81		6.69		8.14	
8	Flow Switch	1	1	SP-107-UV-A	SP-107-UV-B	45.67		52.52		63.94	
9	Blanking Cap O-Ring Seal	1	1	Z-ORS-UV-T-PIECE		1.38		1.58		1.93	
10	Temperature Sensor	1	1	SP-NTC-1000		36.24		41.68		50.74	
11	R' Clip	1	1	Z-MIS-R-CLIP		3.32		3.81		4.64	
12	Quartz Sleeve	1	2	SP-UV-QS		46.27		53.21		64.78	
13	UV Lamp	1	2	SP-UV-LAMP-EL		52.68		53.48		73.76	
14	Quartz Sleeve O-Ring Seal	2	4	SP-UV-ORS		1.42		1.63		1.98	
15	Quartz Sleeve Locking Nut	2	4	SP-UV-LNUT		7.91		9.09		11.07	
16	UV Lamp Holder Clip	2	4	Z-IM-UV-LH-CLIP		6.49		7.46		9.08	
17	UV Lamp Holder Hard Cap	2	4	Z-IM-UV-LH-CAP		8.26		9.50		11.57	
18	PG7 Entry Gland	3	3	Z-CON-CEG-PG7BK		8.23		9.46		11.52	
19	PG7 Entry Gland	4	4	Z-CON-CEG-PG7BK		7.70		8.86		10.78	
20	Lamp Lead Clamp Pozi Pan Screw	4	8	Z-FIX-M4X12		1.74		2.01		2.44	
21	Current Collector Hex Nut	2	2	Z-FIX-M5HEX		5.81		6.69		8.14	
22	Electronic ballast	1	1	SP-UV-BB-55	SP-UV-BB-110	121.329	165.495	139.53	190.32	169.86	231.69
23	Enclosure Fixing Screw	6	6	Z-FIX-M4X16-SC-ST		1.63		1.88		2.28	
24	Lamp Holder Clip Screw	2	4	Z-FIX-M4.8X19STS-SC		5.81		6.69		8.14	
25	Quantum Maintenance Timer PCB	1	1	SP-PCB-UV-PRO		215.12		247.39		301.17	
26	Bracket Screw	6	6	Z-FIX-M4X12		1.63		1.88		2.28	
27	M3 x 8mm PCB Fixing	5	5	Z-FIX-M3X8-BLK		1.63		1.88		2.28	
28	Ballast Fixig Screw	2	2	Z-FIX-M4X12		1.63		1.88		2.28	
29	Lamp Lead Connection	2	4	SP-UV-LLL-S		19.33		22.23		27.06	
30	Large Union O-Ring Seal	2	2	SP-122-ORS		4.69		5.40		6.57	
31+32	Union Socket 2"/ 63mm Union Nut	2	2	SP-122		14.89		17.13		20.85	
33	Union Reducer 1½"/ 50mm	2	2	SP-UV-R		4.95		5.69		6.93	
34	10mm / 44.5mm OD Stainless Steel Ring	2	2	Z-TUB-SS44.5X10		9.38		10.79		13.14	
35	Current Colletor Grub Screw	2	2	Z-FIX-M4X4GS		1.63		1.88		2.28	
36	Current Collector Pin (316 S/S)	2	2	Z-UV-CC-PIN		16.01		18.42		22.42	
37	UV Current Collector Rubber Boot	2	2	Z-UV-CC-RB		4.95		5.69		6.93	
38	UV Current Collector 'O' Ring	2	2	Z-ORS-UV-CC		2.75		3.17		3.86	
39	UV Blanking Plug	2	2	Z-IM-UV-BP		3.88		4.46		5.43	
40	Suction Tubing	1	1	Z-DP-PVCH		8.26		9.50		11.57	
41	Foot Valve Strainer Assembly	1	1	Z-DP-FS		46.31		53.25		64.83	
42	Rubber Lip Valve	1	1	SP-UV-DP-RDV		8.82		10.15		12.35	
43	Dosing Port ssembly	1	1	SP-UV-DP-PA		8.26		9.50		11.57	
44	Dosing Pump Front Cover Screw	1	1	Z-DP-CF-TEC		11.58		13.31		16.21	
45	Dosing Tube Asembly	1	1	SP-DP-ST-TEC		24.28		27.92		33.99	
46	Dosing Pump Roller Assembly	1	1	SP-DP-PR-TEC		33.10		38.06		46.34	
47	Dosing Pump Motor	1	1	SP-DP-M-TEC		64.01		73.61		89.61	
48	Dosing Pump Motor Screw	2	2	Z-FIX-M3X8-BLK		1.63		1.88		2.28	
49	Dosing Pump Motor Washer	2	2	Z-FIX-M3LW		1.63		1.88		2.28	
50	Dosing Pump Front Cover	1	1	Z-DP-FCC-TEC		13.77		15.84		19.28	

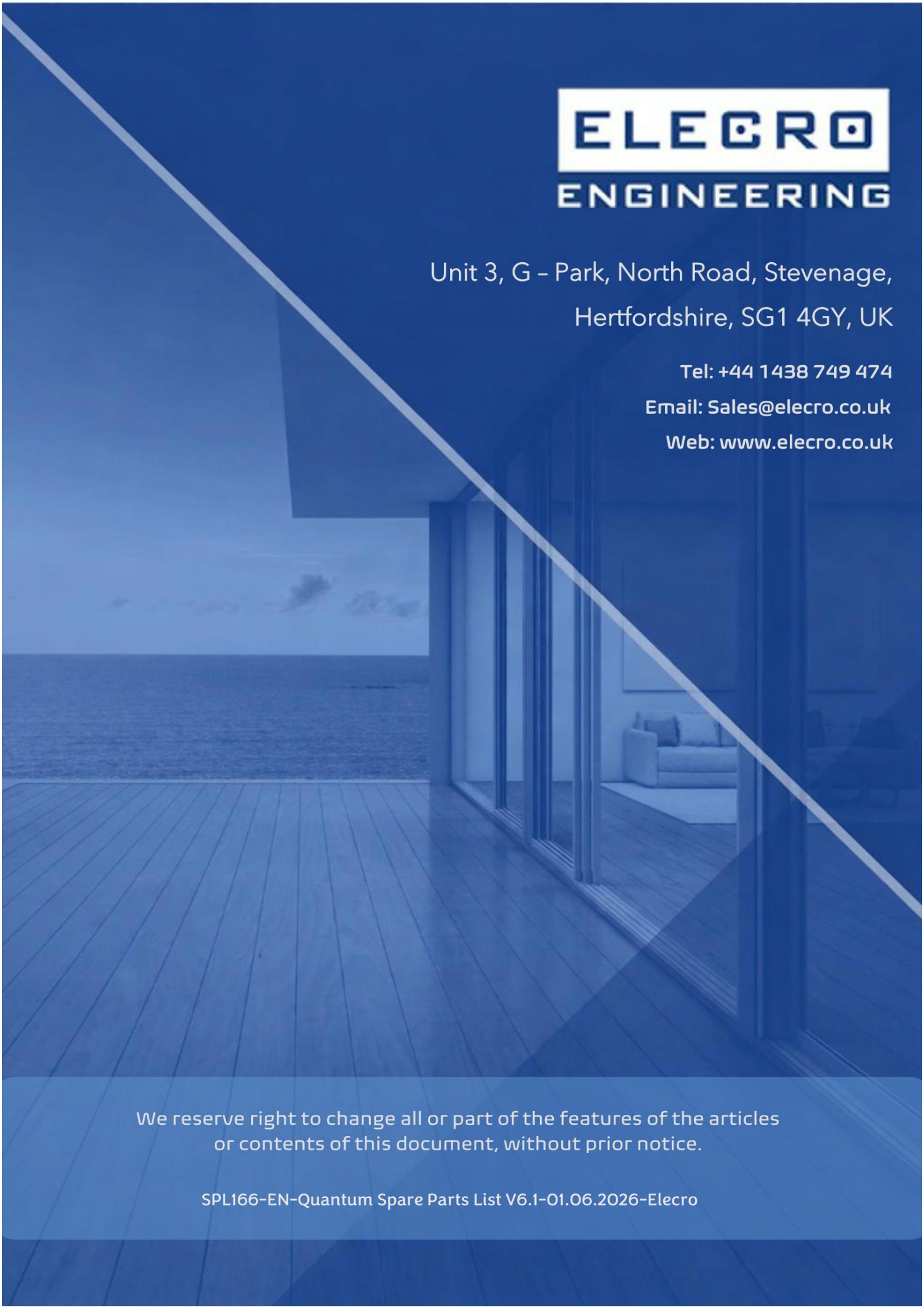

ELECRO ENGINEERING

Unit 3, G – Park, North Road, Stevenage,
Hertfordshire, SG1 4GY, UK

Tel: +44 1438 749 474
Email: Sales@elecro.co.uk
Web: www.elecro.co.uk

We reserve right to change all or part of the features of the articles or contents of this document, without prior notice.

SPL166-EN-Quantum Spare Parts List V6.1-01.06.2026-Elecro